FUNKTION-ONE

F221

Funktion One are renowned for the controlled energy of their loudspeaker systems – this is nowhere more evident than in their bass enclosures which are literally moving audiences around the world with hitherto unprecedented levels of quality vibration. To date, Funktion One's large scale bass systems have been focused around work with 18"s in the form of F218s (with their unique and highly efficient loading technique) and the Infrabass / Infrahorn systems (for extreme low end reinforcement down to 30Hz and below).

In the 1980s Funktion One's Tony Andrews had also pioneered work on the development of the first 21" loudspeaker. This provided the low end for his highly regarded system design of the time which was used on world tours by groups including Pink Floyd and Dire Straits. In 2006, with F1's access to advanced materials and Andrews' heightened understanding of loudspeaker and enclosure tuning, his original 21" concept was due for a revisit. This work has resulted in the F221 with dramatically increased performance including a double 6" voice coil for maximising power input. Furthermore, by substituting Neodymium for Ceramic, the magnet weight has been reduced from 28.5kg to 11.5kg which opened up the possibility of a two by 21" enclosure. This resulting F221 is an exceptional bass enclosure combining real depth, upper bass speed and high efficiency. Also available in self-powered format fitted with superb A6 amplifier module developed in conjunction with XTA.

F221 available
in unpowered or self-powered
variants with common amp-ready woodwork

Driver	Freq. Band	Sensitivity (1W at 1m)	Power (rms)	Nominal Impedance
2x21"	40 - 250Hz	106dB	1500W	2Ω Total (4 x 8Ω coils in parallel)

Frequency Response ± 3dB:	40Hz - 280Hz
Weight	130 kg (288 lbs)
Construction:	18mm Birch ply
Connectors:	2 x Speakon 4 Pole (NL4)

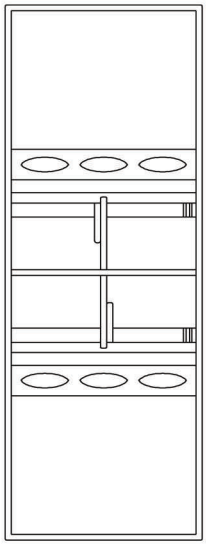

Front

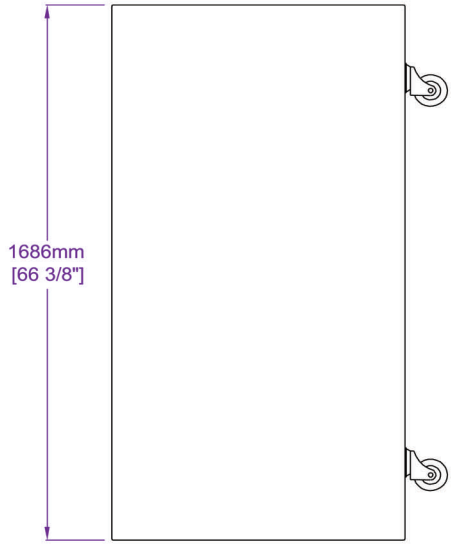

Side

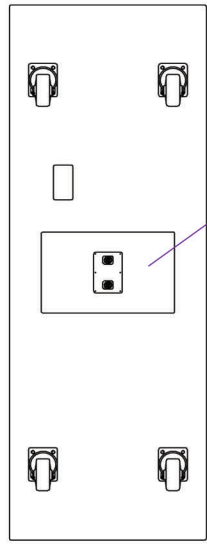

Back

A6 amplifer module
Can be fitted or retrofitted
to any F221 enclosure

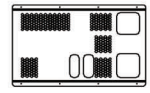

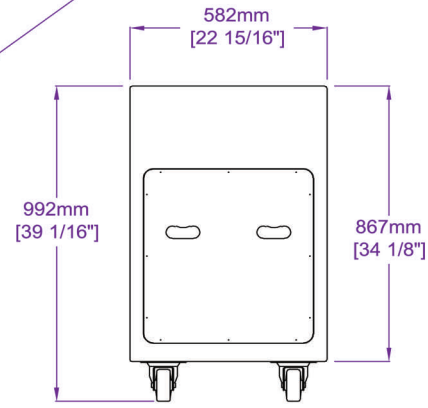

End